MODEL: 50378GYSL

ASSEMBLY INSTRUCTIONS

READ AND SAVE THESE INSTRUCTIONS

UNPACK THE FOUNTAIN

YOU SHOULD HAVE RECEIVED THE FOLLOWING PARTS: FOUNTAIN BODY, RESERVOIR, (2) TWIGS, (2) METAL WASHERS, (2) SCREWS, PUMP WITH SPOT LIGHT, EXTRA MR-11 BULB, RUBBER HOSE, SPLASHGUARD, A BAG OF RIVER STONES AND TRANSFORMER.

FOUNTAIN ASSEMBLY

1. PLACE SPOT LIGHT INTO SPOT LIGHT HOLDER AND PLACE PUMP FLAT IN RESERVOIR, THEN RUN PUMP POWER CORD UP AND OVER BACK OF RESERVOIR.

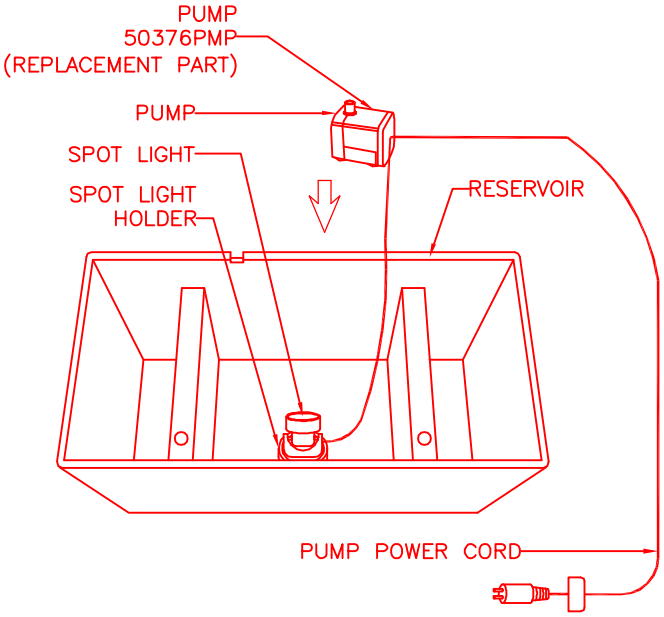

2. ATTACH RUBBER HOSE TO THE PUMP.

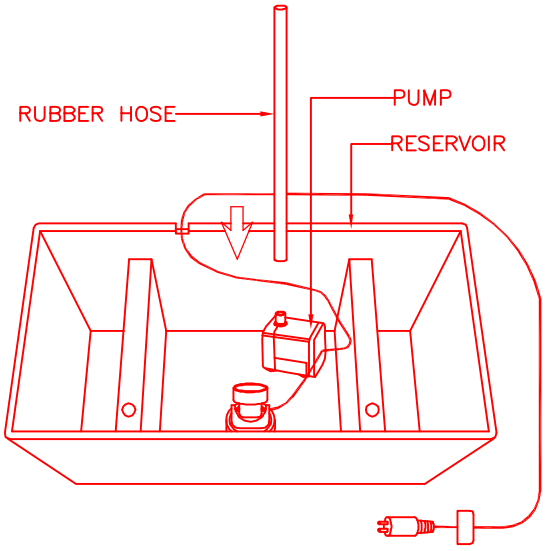

3A. IF OPTIONAL TWIGS ARE BEING USED, PLACE FOUNTAIN BODY INTO RESERVOIR, THEN SECURE OPTIONAL TWIGS AND FOUNTAIN BODY TO RESERVOIR WITH (2) SCREWS.

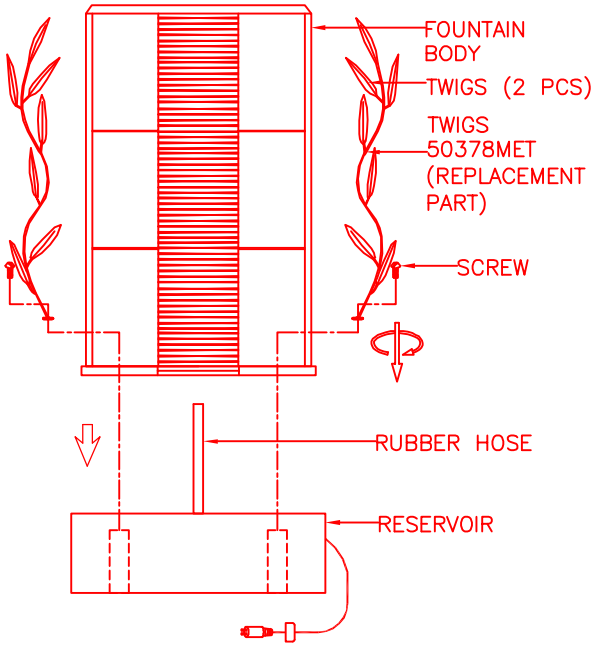

FRONT VIEW:

3B. IF USE OF TWIGS ARE NOT DESIRED, PLACE FOUNTAIN BODY INTO RESERVOIR, THEN SECURE FOUNTAIN BODY TO RESERVOIR WITH (2) METAL WASHERS AND (2) SCREWS.

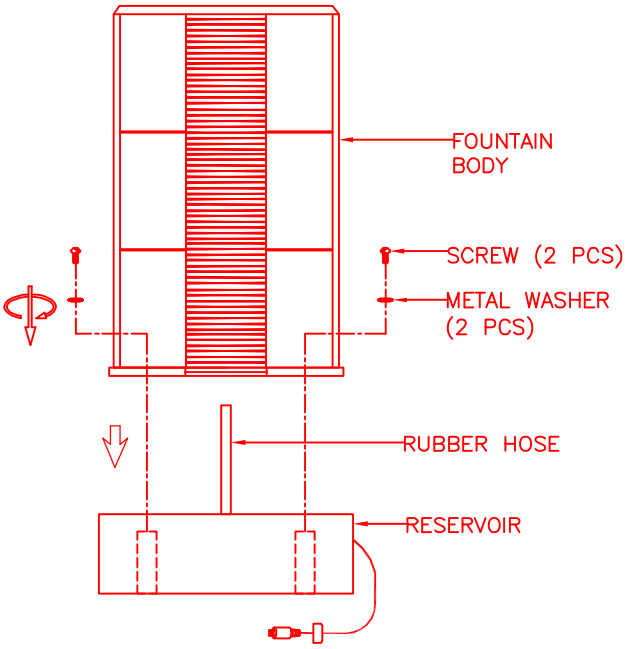

FRONT VIEW:

MODEL: 50378GYSL

ASSEMBLY INSTRUCTIONS

READ AND SAVE THESE INSTRUCTIONS

FOUNTAIN ASSEMBLY

4. JOIN THE RUBBER HOSES TOGETHER FROM BACK OF THE FOUNTAIN BODY.

AVAILABLE PARTS ARE:
53205BLB (MR-11 BULB)
50376PMP (PUMP)
50376TRANS (TRANSFORMER)
50376SGGYSL (SPLASHGUARD)
50378MET (TWIGS)

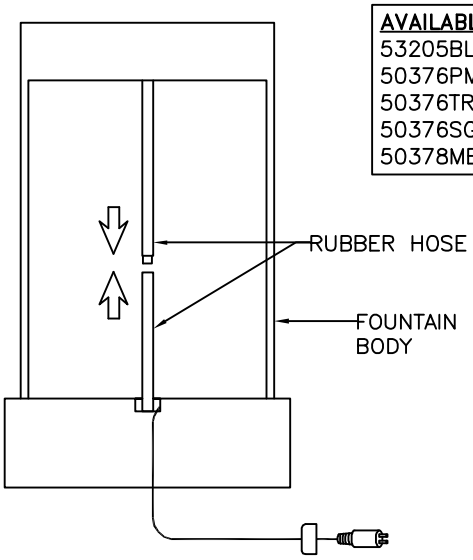

BACK VIEW:

5. PLACE SPLASHGUARD INTO RESERVOIR TO PREVENT RIVER STONE FROM FALLING INTO RESERVOIR, THEN PLACE DECORATIVE RIVER STONES ONTO BOTTOM OF THE FOUNTAIN BODY.

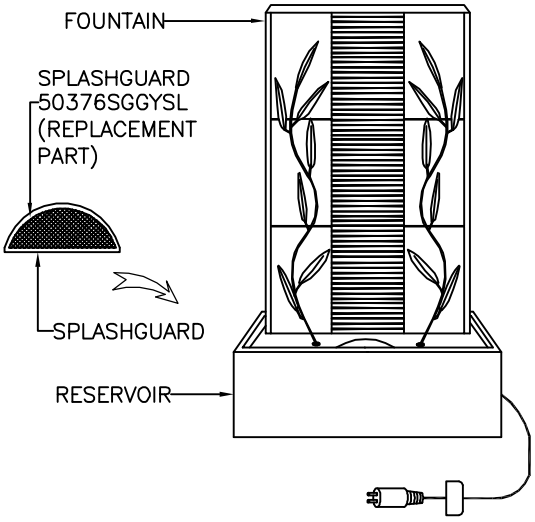

FRONT VIEW:

6. FILL RESERVOIR WITH 1.3 GALLONS OF WATER TO COMPLETELY SUBMERSE THE PUMP.
NOTE: DISTILLED WATER IS RECOMMENDED TO REDUCE MINERAL DEPOSITS AND BACTERIA BUILD-UP.

7. JOIN THE CONNECTORS AT TRANSFORMER AND SCREW THE CAP TIGHTLY TOGETHER.

8. PLUG POWER CORD INTO OUTLET, YOUR NEW FOUNTAIN IS READY FOR USE.

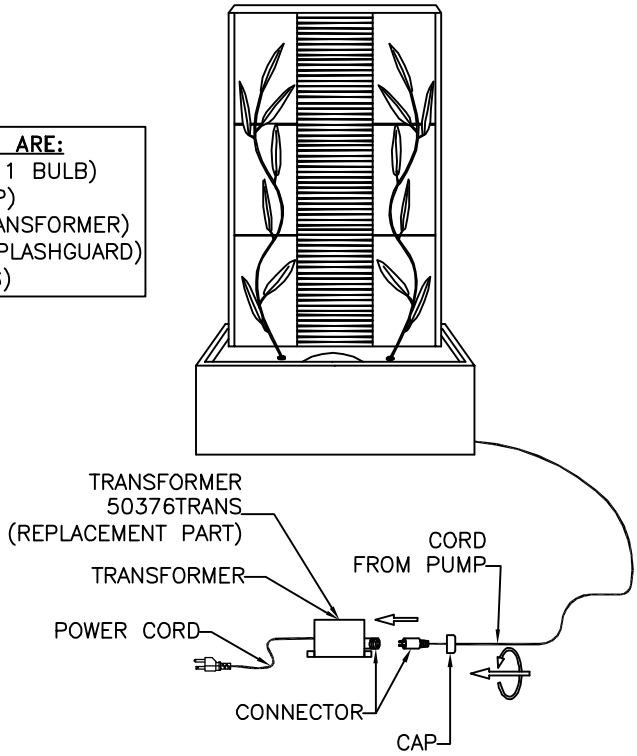

TROUBLE SHOOTING:
1. IF YOUR FOUNTAIN DOES NOT WORK, CHECK PLUG AT THE SOCKET. MAKE SURE THE PLUG IS FULLY AND PROPERLY INSERTED INTO THE WALL OUTLET.
2. NEXT CHECK TO MAKE SURE THE OUTLET IS POWERED.
3. IF THE FOUNTAIN STILL DOES NOT WORK, PLEASE CONTACT YOUR DISTRIBUTOR OR PLACE OF PURCHASE.

SPLASHING DISCLAIMER:
SPLASHING MAY OCCUR WHEN FOUNTAIN IS INITIALLY TURNED ON. PROTECT SURROUNDING SURFACES AS NEEDED.

IMPORTANT PUMP INFORMATION:
PUMP MUST BE FULLY SUBMERSED IN WATER WHILE OPERATING.

WATER:
TO REDUCE MINERAL DEPOSITS AND BACTERIA BUILD UP THE USE OF DISTILLED WATER IS RECOMMENDED.

WARNING:
* ONCE A WEEK INSPECT FOUNTAIN, FLOOR AND ADJACENT WALL FOR MOISTURE BUILD-UP AND CLEAN AS NECESSARY. THIS IS ESPECIALLY IMPORTANT FOR HUMID ENVIRONMENTS.
** THIS FOUNTAIN IS RATED FOR INDOOR & OUTDOOR USE.
*** THIS UNIT MUST BE CONNECTED TO A SUPPLY CIRCUIT THAT IS PROTECTED BY A GROUND FAULT CIRCUIT INTERRUPTER (GFCI). THE GFCI SHOULD BE TESTED ON A ROUTINE BASIS. TO TEST THE GFCI, PUSH THE TEST BUTTON. THE GFCI SHOULD INTERRUPT POWER. PUSH THE RESET BUTTON. POWER SHOULD BE RESTORED. IF THE GFCI FAILS TO OPERATE IN THIS MANNER, THE GFCI IS DEFECTIVE.